注塑机 · 压铸机·挤压铸造机 装备制造商

INJECTION MOLDING MACHINE · DIE-CASTING MACHINE ·SQUEEZE CASTING MACHINE

2024年6月版

广东联升精密智能装备科技有限公司

LANSON PRECISION INTELLIGENCE EQUIPMENT TECHNOLOGY CO., LTD

地址:中国广东省佛山市顺德区大良街道顺番公路五沙段6号
ADD:No.6 Wusha Area Shunpan Road Daliang Shunde District Foshan City, Guangdong, China
电话/Tel:86-757-29965888传真/Fax:86-757-29994033
邮箱/E-mail:xavier@lanson-imm.com 网址:www.lansonmachinery.com

香港联升科技有限公司

JOINT ASCENT TECHNOLOGY LIMITED

地址:香港中环砵典咋街6-8号立辉大厦8楼804室
ADD:Room 804,Lap Fai Building,6-8 Pottinger Street,Central,HongKong

【免责声明】

【1】本公司保留对样本中描述产品进行改进的权利,规格如有变更,恕不另行通知。

【2】样本中的产品照片仅供参考,产品以实物为准。

【3】样本中数据为联升精密厂内测试检验得出,仅作参考信息,不保证是最新数据,一切以实际产品为准。

DISCLAIMER

1. Our company reserves the right to make improvements to the products described in the sample. Specifications are subject to change without prior notice.

2. The product photos in the sample are for reference only, and the actual product shall prevail.

3. The data in the sample is obtained through on-site testing and inspection by LANSON Company, and is for reference only. It is not guaranteed to be the latest data, and all actual products shall prevail.

LANSON

DIE-CASTING MACHINE

LS 系列冷室压铸机

180T-5000T

TECHNICAL INNOVATION FOR FUTURE

联 聚 升 华　智 造 未 来

TECHNICAL INNOVATION FOR FUTURE

联聚升华 智造未来

广东联升精密智能装备科技有限公司是一家专业从事精密机械装备研发与生产的国家级高新科技型企业，成立于2005年。公司配备了涵盖设计、生产、加工、装配及检测设备的一体化生产线，旗下产品以高精度注塑机和高性能铝镁合金压铸机为主。企业致力于为客户提供一体化的模压成型生产解决方案。

联升专注于“模压成型”专用机械设备领域的技术发展，始终聚焦产品的高性能，聚焦行业技术难题的解决，聚焦打造自身产品特色和自主知识产权。借助于自身技术，致力于为不同客户提供针对性定制设备，企业旗下拥有自建研发团队和实验室，具备近20年的市场研发，产品生产、检验以及技术开发经验，取得了100多项国家技术专利。旗下产品主要应用于高速精密塑料制品、多元化多样化塑料制品生产领域和铝镁合金精密压铸成型生产领域。

Founded in 2005, Lanson Precision Intelligence Equipment Technology Co., Ltd is a national high-tech enterprise, covers an area of 100 thousand square meters,Located in Shunde District, Foshan City, a city with highly concentrated industry.

Lanson has advanced equipment for designing processing, manufacturing and testing. We have our own R&D team and laboratory, with nearly 20 years of experience in market research and development, product production, inspection and technology development, and have obtained more than 100 national technology patents.Our major products are plastic injection moulding machines and die casting machines for aluminum and magnesium. We dedicate to provide professional turn-key moulding solution to customers.

核心技术亮点 TECHNOLOGICAL HIGHLIGHTS

+ 高标准
HIGH STANDARD

引进国际先进压铸设备设计技术，采用国际标准制造，具有专利技术的压射、锁模和控制系统，产品性能已达国际先进水平。

Introducing advanced European die-casting equipment design technology, adopting international standards for manufacturing, with patented injection, clamping, and control systems, the product performance has reached the international advanced level.

+ 高性能
HIGH PERFORMANCE

强劲高效的锁模系统设计，曲肘运动机构受力更合理、运行更平稳，系统刚性更好，极大提升了设备稳定性、先进性、实用性。

The powerful and efficient mold locking system design makes the elbow movement mechanism more reasonable in force, more stable in operation, and more rigid in the system, greatly improving the stability, progressiveness and practicability of the equipment.

+ 高效率
HIGH EFFICIENCY

联升为客户提供高度集成、高度自动化、高效率的压铸单元综合应用技术。

LANSON provides customers with highly integrated, automated, and efficient die casting unit comprehensive application technology.

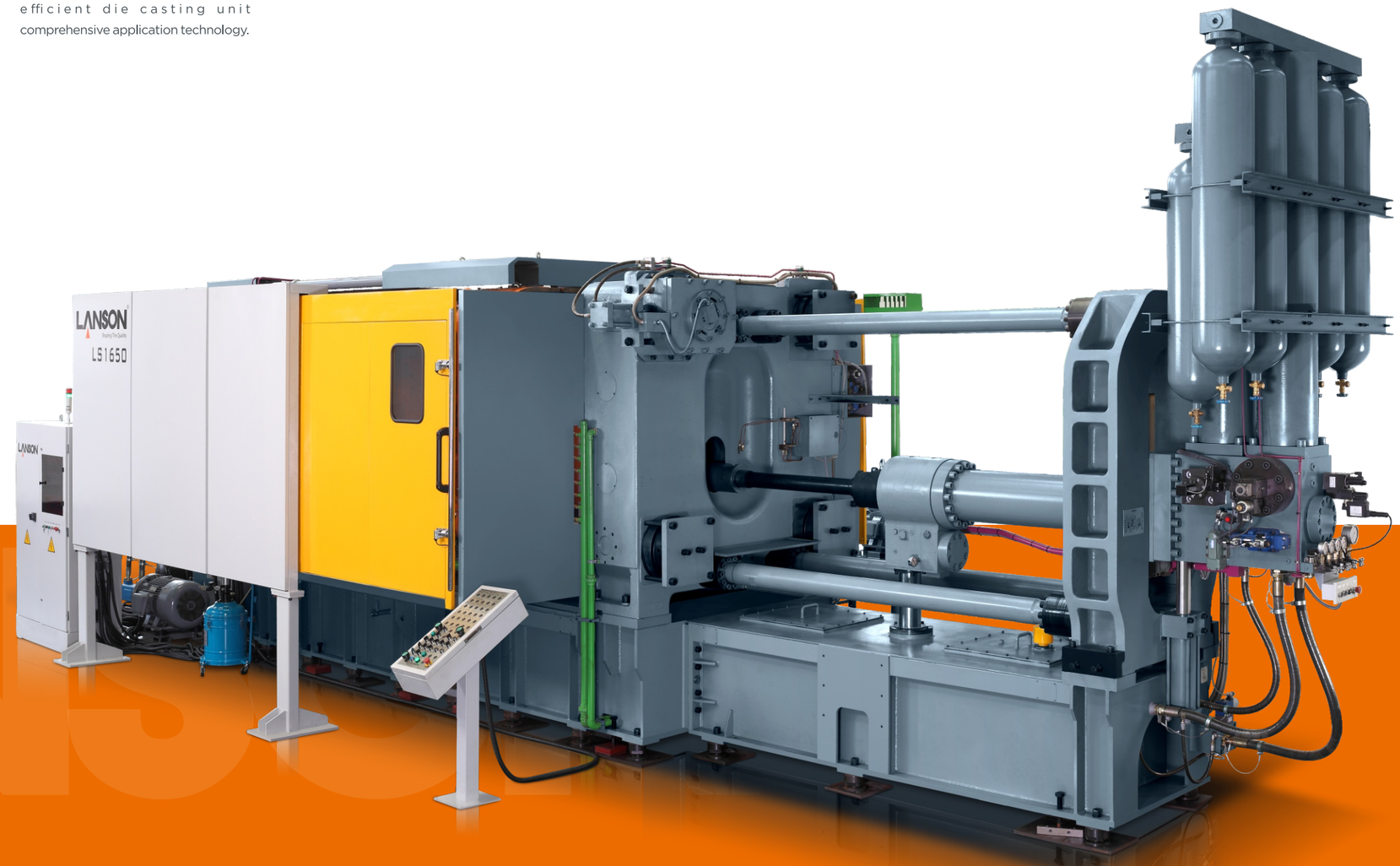

TECHNICAL INNOVATION FOR FUTURE

联聚升华　智造未来

* LS系列机型外观根据实际设备吨位有所区别，请以实机外观为准;
*The appearance of LS series models may vary depending on the actual equipment tonnage. Please refer to the actual appearance of the machine;

压射系统 INJECTION SYSTEM

稳定可靠的高性能压射系统 STABLE INJECTION SYSTEM

压射系统采用多点设定，多段控制，压射工艺参数调节范围宽，适应性强；

压射和增压回路独立设计，杜绝干扰，提升压射稳定性；

压射系统具有更快速、更稳定的特点，最大空压射速度：≥8m/s，增压建压时间：≤20ms（大机），≤15ms（小机）；

The design of multi-point settings, multi-phase control and wide range of injection parameter adjustment makes the applicability of machines more extensive;

Independent design of the injection loop and intensification loop,improve the stability by avoiding interference;

Maximum empty injection speed≥8m/s,intensification pressure building time ≤20ms(big tonnage),≤15ms(medium and small tonnage);

国际顶级品牌配件
FIRST-CLASS SPARE PARTS

采用力士乐、东京计器、油研等世界顶级品牌液压元件，及高性能、低噪音的油泵，确保压力及流量的稳定。

It uses world-class hydraulic components such as Rexroth, Tokyo Keiki, and Yuken, as well as high-performance, low-noise oil pumps to ensure stable pressure and flow.

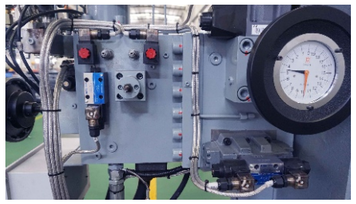

非接触位移
NON-CONTACT INJECTION STROKE

非接触式位移，速度转换位移精准，重复精度高。

Non-contact injection stroke detection, accurate control and high reliability.

高效储能器组件
EFFICIENT ACCUMULATOR

储能器容积大，建压迅速，建速快，压降小，能量足，压射过程压力和速度更为稳定、高效。

Large accumulator design, small pressure drop, adequate energy, high injection repetition, fast ramp pressure and speed response, more stable for pressure and speed. Improving the efficiency.

快压射及增压控制调整
HIGH SPEED INJECTION AND CONTROL ADJUSTMENT

快压射及增压压力和流量采用高精密电比例阀或电动阀实现屏幕设定、调节方便、稳定性高、工艺参数设置存取容易（大机标配、小机选配）。

High speed injection, intensification pressure and rate of flow are controlled by the high precision electric proportional valve in the controller. Convenient, stable and save parameter easily. *Small machines are option, big machines are standard.

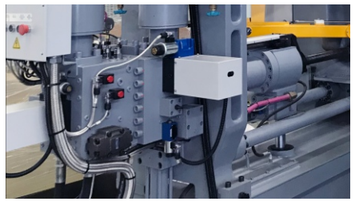

锁模系统 CLAMPING SYSTEM

强劲高效的锁模系统 STABLE INJECTION SYSTEM

强壮耐用的双曲肘合模机构及模板设计，移模动作更加平稳、快速、有力，使用寿命更长；

特快锁模技术，有效缩短生产周期，提高生产效率；

防水防尘设计的哥林柱自动抽出装置（大机标配，小机选配），满足大型模具的安装要求；

The strong and durable double elbow clamping unit and template design make the mold movement smoother, faster, and more powerful, resulting in a longer service life;

High speed die closing technology,reduce the production cycle and improve production efficiency;

Waterproof and dust proof design tie bar extraction system(standard for large tonnage machine,optional for small and medium tonnage machine), meets the needs of large scale mold installation;

整体箱式模板及加厚设计
INTEGRATED BOX TEMPLATE AND THICKENED DESIGN

创新的整体箱式模板及加厚设计，确保高刚性、高强度、高稳定性，增加使用寿命。

New integrated box type platen, thicker platen design, stronger rigidity, high strength, high stability, durable in impact resistant, longer usage life.

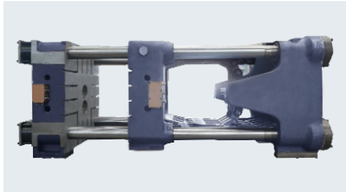

创新的曲轴结构设计
INNOVATIVE HINGE AND TEMPLATE DESIGN

机铰及模板铰耳设计加多、加宽、全镶套，受力更为均匀，减少应力变形，增加耐冲击性。

Widened toggle and platen hinge ears, the compression will be even so that the chance of bending and deformation can be reduced.

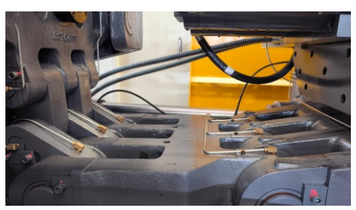

防水防尘抽杠装置
WATERPROOF AND DUSTPROOF DEVICE

联升防水防尘设计的抽杠装置，不易进水、尘屑，不易生锈。

LANSON's waterproof and dustproof design makes the device less susceptible to water, dust and rust.

更大容模空间
LARGER CAPACITY SPACE

更大的容模空间设计，适用范围更大，减少飞料的机会。

The design of increasing the die height, allowing to accommodate larger die.

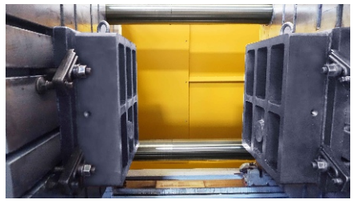

高拉力合金钢导柱
HIGH TENSILE ALLOY STEEL GUIDE COLUMN

联升专利特别设计的高拉力合金钢导柱，延长使用寿命。

Patented high tensile alloy tie bar design, ensure reliable and durable of the clamping system, longer usage life.

控制系统 CONTROL SYSTEM

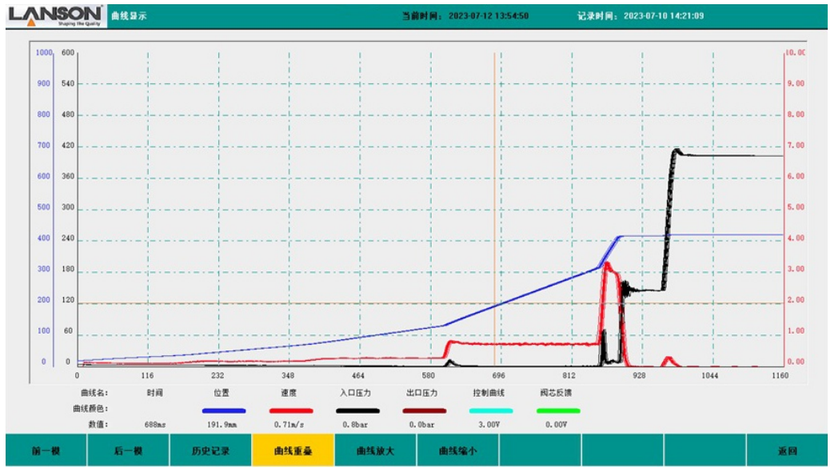

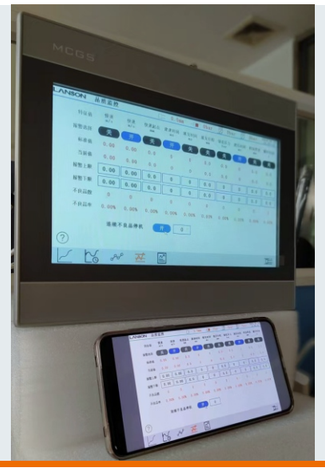

+ 智能压射系统
  INTELLIGENT INJECTION SYSTEM
+ 智能品质监控系统
  INTELLIGENT QUALITY MONITORING SYSTEM
+ 远程监控维护系统
  REMOTE MONITORING AND MAINTENANCE SYSTEM
+ 智能调模系统
  INTELLIGENT MOLD ADJUSTMENT SYSTEM
+ 快速换模系统
  QUICK MOLD CHANGE SYSTEM

功能完善的智能化控制系统 INTELLIGENT CONTROL SYSTEM

控制系统采用西门子，欧姆龙等顶级知名电器控制元件，响应迅速，控制精度高，抗干扰能力强，能在恶劣的环境稳定工作，维护率及损坏率低。

欧洲式开关电源，响应快，常用于高端机。

采用高性能伺服控制技术（LS220-LS500选配，其余机型标配）更节能环保。

采用电比例控制系统，具备多段压力和速度控制以及低压合模保护功能。

The control system adopts Siemens, Omron and other top famous electrical control components, rapid response, high control precision, strong anti-interference ability, it can work stably in the harsh environment, low maintenance rate and damage rate.

European type switching power supply, fast response.

High technology servo system for energy saving (LS220-LS500 are optional, others are standard)

Electrical proportional control system, with multi-stage pressure and speed control and low pressure mold closing protection function.

卓越精确的实时控制系统(选配) REAL TINE CONTROL

十段压射速度设定，并在单次压射中可实时反馈及控制，操作简单、设定方便、工艺参数范围广，可满足各种复杂产品的工艺要求。

在低速段可实现无冲击启动压射，压射锤头平稳移动，大大减少空气卷入金属熔液内，提升铸件质量。

利用闭环反馈控制，可在充型接近完成时进行刹车控制，减少飞边问题，并延长模具使用寿命。

实时控制系统以大流量、高响应的伺服阀进行有效的缩短提速时间，更能满足客户需求，既保证了产品的外观品质，又减少了产品内部的的空气含量。

More than ten sections of injection speed setting,real time feedback and control in single shot,simple operation,convenience setting,wide technology parameter,can satisfy all kinds of process requirement of complex products;

Can realize injection start up without impact at the low speed phase, and start by constant acceleration,injection plunger head move smoothly, greatly reduced the air drawn into metal; solution to improve the quality of castings parts;

Based on closed loop feedback control. brake control can be carried out when the mold filling is close to completion, the problem of fins is reduced, and extend the usage life of mold;

Real-time control system with high flow,high response servo valve to effectively shorten the acceleration time,can better meet the needs of customer requirements, to ensure the appearance and the quality of the product,and reduce the air content inside the product.

+ 闭环控制
  CLOSED-LOOP CONTROL
+ 匀加速慢压射
  SLOW INJECTION SPEED WITH UNIFORM ACCELERATION
+ 多段压射
  MULTI-STAGE INJECTION
+ 刹车功能
  INJECTION BRAKE FUNCTION
+ 重复精度高
  HIGH REPETITION ACCURACY
+ 高速压射加速快
  HIGH INJECTION SPEED FAST ACCELERATION
+ 操作简单易用
  SIMPLE OPERATION

压铸生产工业4.0解决方案
DIE-CASTING INDUSTRY 4.0 SOLUTION

TECHNICAL INNOVATION FOR FUTURE
联聚升华　智造未来

专为压铸机开发的网络控制与传输功能，实现对整个压铸车间设备和生产过程的信息化管理。

联网后可随时随地通过智能手机或电脑掌控压铸机及压铸生产过程，提升压铸生产管理水平，提高生产效率，降低管理成本。

Network control and transmission function specially developed for die casting machine, to realize information management for the equipment and production process of the whole die-casting workshop;

Connecting the network to control the die-casting machines and production process through smart phones and computers at any time and place,improve the die casting production management level and production efficiency, reduce manufacturing cost.

智能化压铸工业生态
INTELLIGENT DIE-CASTING INDUSTRY ECOLOGY

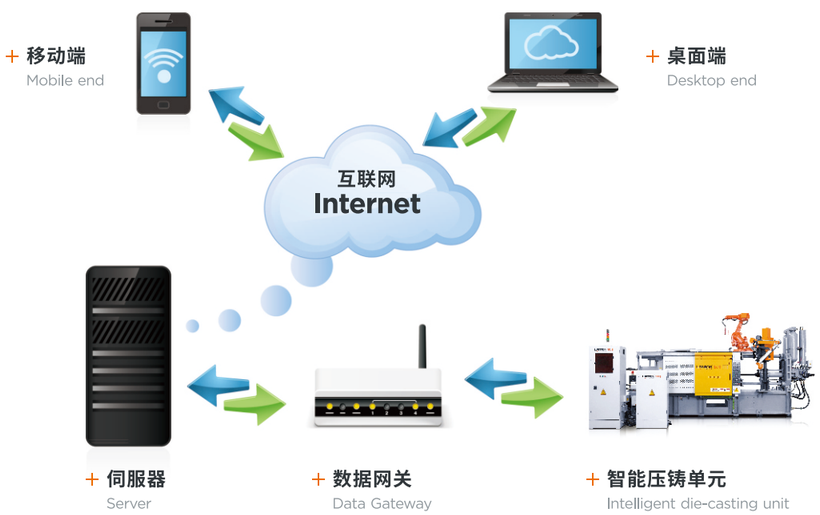

更绿色、更节能
GREENER AND MORE ENERGY-EFFICIENT

普通压铸机液压系统中，油泵电机以恒定转速提供流量，多余油通过溢流阀回流，即高压节流。据统计，由高压节流造成的能量损失高达36%-68%。

采用伺服节能控制系统，通过厂内测试对比，节能率高达45%-85%，生产效率提高5%。

In the hydraulic system of a regular die-casting machine, the oil pump motor provides flow at a constant speed, and excess oil flows back through the relief valve, which is high-pressure throttling. According to statistics, the energy loss caused by high-pressure throttling is as high as 36% -68%.

Adopting a servo energy-saving control system, through factory testing and comparison, the energy-saving rate is as high as 45% -85%, and the production efficiency is improved by 5%.

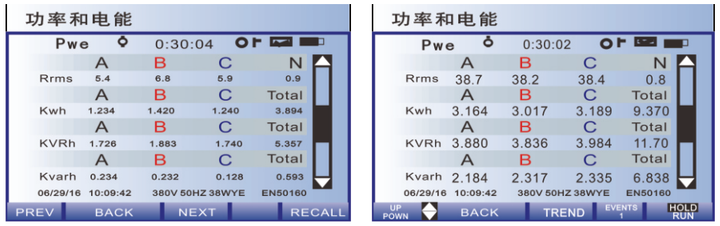

+ 伺服节能系统与普通电机系统用电量对比
Power consumption comparison of Energy saving servo system and general motor system.

LS180-LS400技术参数 SPECIFICATION

项目	ITEM	unit	LS180		LS220			LS300			LS350			LS400			LS400P		
锁模力	Clamping Force	kN	1800		2200			3000			3500			4000			4000		
锁模行程	Clamping Stroke	mm	380		400			460			520			550			550		
顶出力	Ejector Force	kN	110		110			160			160			200			200		
顶出行程	Ejector Stroke	mm	90		100			110			110			130			130		
模具厚度(最小-最大)	Die Height(Min.-Max.)	mm	200-600		200-600			250-700			250-700			300-750			300-750		
模板尺寸(水平X垂直)	Platen Size(HxV)	mm	690X690		800X800			870X870			940X940			1010X1010			1010X1010		
哥林柱内距 (水平X垂直)	Space Between Tie Bars(HxV)	mm	460X460		510X510			570X570			620x620			669X669			669x669		
压射力(增压)	Injection Force(with intensification)	kN	280		300			350			380			400			450		
射料行程	Injection Stroke	mm	350		370			410			480			510			510		
射料锤头直径	Plunger Diameter	mm	50	60	50	60	70	50	60	70	60	70	80	60	70	80	60	70	80
射料量(铝)	Injection weight	kg	1. 3	1. 86	1. 36	1. 96	2.6	1.5	2.1	2.9	2.5	3.4	4.5	2.7	3.7	4.8	2.7	3.7	4.8
铸造压力(增压)	Casting Pressure(with intensification)	MPa	142	99	152	106	77	168	116	85	134	98	75	141	103	79	159	116	89
铸造面积	Casting Area	cm^2	126	181	143	207	282	178	257	350	260	354	462	282	384	502	251	342	446
最大铸造面积(40MPa)	Max. Casting Area (40MPa)	cm^2	450		550			750			875			1000			1000		
压射位置	Injection Position	mm	0, -140		0, -140			0, -140			0, -175			0, -175			0, -175		
选配压射位置	Optional Injection Position	mm	-100/-125		-100/-125			-125/-160			-140/-200/-220			-200/-220			-200/-220		
射料锤头推出距离	Plunger Penetration	mm	140		140			150			180			210			210		
压射室法兰直径	Diamater Of Pressure Chamber Flange	mm	110		110			101.6			101.6/110			101.6/110			101.6/110		
压射室法兰凸出定板高度	Height Of Pressure Chamber Flange	mm	10		10			12			12/10			12/10			12/10		
系统工作压力	Hydraulic Working Pressure	Mpa	14.5		14. 5			16			16			16			16		
普通电机功率/伺服电机功率	Motor Capacity/Capacity of Servo Motor	Kw	15/22		15/22			22/30.4			22/30.4			22/30.4			30/43.6		
油箱容量	Hydraulic Oil Tank Capacity	L	500		600			700			750			800			800		
机器外形尺寸(长X宽X高)	Machine Dimensions(LxWxH)	mm	5850x1470x2670		6000X1550X2750			6660X1880X2780			6580X1880X2880			7000x2000X2870			7000x2000X2870		
机器吊装参考重量	Machine lifting reference weight	T	7		10			12			14			15. 5			16		

说明：

1.我司保留权利作出任何技术数据修改，恕不另行通知，敬请谅解。

2.样本中的产品照片仅供参考，产品以实物为准。

3.机器外形尺寸不包括熔炉及控制电箱。

NOTE:

1.The technical parameters above are for reference only and discrepancies may arise in different circumstances. The company keeps upgrading the products and reserves the right to change the product specifications and parameters without prior notice. The final interpretation to the above specifications and parameters belongs to the company.

2.Samples of the product photos for reference only, the product in kind prevail.

3.The machine demension dose not include furnace and control cabinet.

LS500-LS1300技术参数 SPECIFICATION

项目	ITEM	unit	LS500			LS650			LS800			LS900			LS1000	LS1300	LS1650
锁模力	Clamping Force	kN	5000			6500			8000			9000			10000	13000	16500
锁模行程	Clamping Stroke	mm	580			680			760			800			880	1000	1200
顶出力	Ejector Force	kN	250			300			360			360			500	560	600
顶出行程	Ejector Stroke	mm	140			160			180			190			200	200	250
模具厚度(最小-最大)	Die Height(Min.-Max.)	mm	350-850			350-900			400-950			400-1000			450-1150	450-1200	500-1400
模板尺寸(水平X垂直)	Platen Size(HxV)	mm	1162X1162			1290X1290			1420X1420			1470X1470			1620X1620	1760X1760	2000X2000
哥林柱内距(水平X垂直)	Space Between Tie Bars(HxV)	mm	760X760			850X850			930x930			960x960			1030X1030	1100X1100	1250X1250
压射力(增压)	Injection Force(with intensification)	kN	480			600			690			780			882	1100	1285
射料行程	Injection Stroke	mm	580			650			760			760			800	910	970
射料锤头直径	Plunger Diameter	mm	70	80	90	70	80	90	80	90	100	80	90	100	90-120	100-140	110-150
射料量(铝)	Injection weight	kg	4.2	5.5	6.9	4.6	6.1	7.7	7.2	9.1	11.2	7.2	9.1	11.2	9.5-17.0	13.4-26.3	17.3-32.1
铸造压力(增压)	Casting Pressure(with intensification)	MPa	124	95	75	155	118	94	137	108	87	155	122	99	138.6-78	140-71	135-72
铸造面积	Casting Area	cm^2	400	523	662	416	544	689	582	737	910	579	734	906	720-1280	928-1830	1220-2290
最大铸造面积(40MPa)	Max. Casting Area (40MPa)	cm^2	1250			1625			2000			2250			2500	3250	4125
压射位置	Injection Position	mm	0, -220			0, -250			0, -250			0, -250			-100, -300	-160, -320	-175, -350
选配压射位置	Optional Injection Position	mm	-175/-200/-250			-175/-200/-280			-175/-200/-280			-175/-200/-280			/	/	/
射料锤头推出距离	Plunger Penetration	mm	250			280			300			300			300	350	400
压射室法兰直径	Diamater Of Pressure Chamber Flange	mm	165			165			200			200			240	240	260
压射室法兰凸出定板高度	Height Of Pressure Chamber Flange	mm	15			15			20			20			20	25	25
系统工作压力	Hydraulic Working Pressure	Mpa	16			16			16			16			16	16	16
普通电机功率/伺服电机功率	Motor Capacity/Capacity of Servo Motor	Kw	30/43.6			37/55.5			45/55.5			45/75			45/75	74/55.5x2	90/75x2
油箱容量	Hydraulic Oil Tank Capacity	L	1000			1100			1400			1500			2000	2300	3000
机器外形尺寸(长X宽X高)	Machine Dimensions(LxWxH)	mm	7750X2280X3140			8110X2360X3230			8870X2500X3310			9240X2500X3720			10050X4300X3950	11250X4450X4500	12200X4700X4600
机器吊装参考重量	Machine lifting reference weight	T	22			28			38			45			70	80	95

说明：

1.我司保留权利作出任何技术数据修改，恕不另行通知，敬请谅解。

2.样本中的产品照片仅供参考，产品以实物为准。

3.机器外形尺寸不包括熔炉及控制电箱。

NOTE:

1.The technical parameters above are for reference only and discrepancies may arise in different circumstances. The company keeps upgrading the products and reserves the right to change the product specifications and parameters without prior notice. The final interpretation to the above specifications and parameters belongs to the company.

2.Samples of the product photos for reference only, the product in kind prevail.

3.The machine demension dose not include furnace and control cabinet.

LS2000-LS5000技术参数 SPECIFICATION

项目	ITEM	unit	LS2000	LS2500	LS3000	LS3500	LS4000	LS4500	LS5000
锁模力	Clamping Force	kN	20000	25000	30000	35000	40000	45000	50000
锁模行程	Clamping Stroke	mm	1400	1500	1500	1600	1800	1900	1900
顶出力	Ejector Force	kN	650	750	900	1000	1000	1000	1000
顶出行程	Ejector Stroke	mm	300	300	300	350	350	400	400
模具厚度(最小-最大)	Die Height(Min.-Max.)	mm	650-1600	750-1800	800-2000	850-2000	900-2100	900-2100	900-2100
模板尺寸(水平X垂直)	Platen Size(HxV)	mm	2150X2150	2350X2350	2620X2620	2800X2800	2900X2900	3000X3000	3150X3150
哥林柱内距 (水平X垂直)	Space Between Tie Bars(HxV)	mm	1350X1350	1500X1500	1650X1650	1750X1750	1850X1850	1950X1950	2050X2050
压射力(增压)	Injection Force(with intensification)	kN	1510	1750	1950	2450	2450	2710	2710
射料行程	Injection Stroke	mm	1050	1100	1200	1400	1400	1600	1600
射料锤头直径	Plunger Diameter	mm	120-160	140-180	150-190	160-200	160-200	180-220	180-220
射料量(铝)	Injection weight	kg	22.3-39.6	31.7-52.5	39.8-63.8	52.7-82.4	52.7-82.4	76.3-114.0	76.3-114.0
铸造压力(增压)	Casting Pressure(with intensification)	MPa	133-75	113-68	110-68	120-77	120-77	106-71	106-71
铸造面积	Casting Area	cm^2	1500-2660	2210-3675	2725-4410	2910-4540	3330-5190	4220-6310	4690-7010
最大铸造面积(40MPa)	Max. Casting Area (40MPa)	cm^2	5000	6250	7500	8750	10000	11250	12500
压射位置	Injection Position	mm	-175, -350	-200, -400	-250, -450	-300, -600	-300, -600	-300, -600	-300, -600
射料锤头推出距离	Plunger Penetration	mm	450	500	550	600	600	700	700
压射室法兰直径	Diamater Of Pressure Chamber Flange	mm	260	280	280	320	320	340	340
压射室法兰凸出定板高度	Height Of Pressure Chamber Flange	mm	30	30	30	35	35	35	35
系统工作压力	Hydraulic Working Pressure	Mpa	16	16	16	18	18	18	18
普通电机功率/伺服电机功率	Motor Capacity/Capacity of Servo Motor	Kw	110/55.5x3	135/55.5x4	165/55.5x4	180/55.5x5	220/55.5x5	220/55.5x5	275/55.5x6
油箱容量	Hydraulic Oil Tank Capacity	L	3600	3800	4600	5300	5500	5700	6000
机器外形尺寸(长X宽X高)	Machine Dimensions(LxWxH)	mm	13700X4850X4700	15050X5050X5300	15400X5300X5400	15800X5500X5600	16500X5650X5700	17300X5770X5820	18900X7000X6300
机器吊装参考重量	Machine lifting reference weight	T	120	160	200	240	270	310	340

说明：

1.我司保留权利作出任何技术数据修改，恕不另行通知，敬请谅解。

2.样本中的产品照片仅供参考，产品以实物为准。

3.机器外形尺寸不包括熔炉及控制电箱。

NOTE:

1.The technical parameters above are for reference only and discrepancies may arise in different circumstances. The company keeps upgrading the products and reserves the right to change the product specifications and parameters without prior notice. The final interpretation to the above specifications and parameters belongs to the company.

2.Samples of the product photos for reference only, the product in kind prevail.

3.The machine demension dose not include furnace and control cabinet.

LS180-LS900配置表 STANDARD SERIES CONFIGURATION TABLE

	配置项目	CONFIGURATION ITEMS	LS180	LS220	LS300	LS350	LS400	LS400P	LS500	LS650	LS800	LS900
主体部分		Main parts										
1	联升标准机身颜色	Lanson standard machine color	●	●	●	●	●	●	●	●	●	●
2	操作侧手动安全门	Manual safety door on operation side	●	●	●	●	●	●	●	●	●	●
3	操作侧电动安全门	Electric safety door on operation side	○	○	○	○	○	○	○	○	○	○
4	反操作侧手动安全门	Manual safety door on non-operation side	●	●	●	●	●	●	●	●	-	-
5	反操作侧电动安全门	Electric safety door on non-operation side	○	○	○	○	○	○	○	○	●	●
压射部分		Injection unit										
1	压射/增压手动调节控制	Manual control of injection / intensification	●	●	●	●	●	●	●	●	●	●
2	压射/增压电比例调节控制	Electrical proportional control of injection / intensification	○	○	○	○	○	○	○	○	○	○
3	非接触式位移传感器控制行程	Non-contact displacement sensor of stroke control	●	●	●	●	●	●	●	●	●	●
4	近接开关控制行程	Proximity switch of stroke control	○	○	○	○	○	○	○	○	○	○
5	升降装置	lifting device	●	●	●	●	●	●	●	●	●	●
6	实时控制系统	Real time control system	○	○	○	○	○	○	○	○	○	○
合模部分		Clamping unit										
1	双比例控制开锁模	Dual proportional control of mold open and close	●	●	●	●	●	●	●	●	●	●
2	电子尺控制开合模行程	Linear transducer for mold opening and closing	●	●	●	●	●	●	●	●	●	●
3	特快锁模系统	Extremely fast mold closing system	●	●	●	●	●	●	●	●	●	●
4	机油+黄油双润滑系统(黄油手动)	Oil and grease lubrication system (Grease by manual)	●	●	●	●	●	●	●	●	●	●
5	手动调模	Manual mold adjustment	●	●	●	●	●	●	●	●	●	●
6	自动调模	Automatic mold adjustment	○	○	○	○	○	○	○	○	○	○
7	操作侧液压抽大杠装置(1根)	Hydraulic tie bar extraction (1pc) system on operation side	-	-	○	○	○	○	○	○	○	○
8	锁模力显示	Clamping force display	○	○	○	○	○	○	○	○	○	○
液压部分		Hydraulic part										
1	系统压力及流量双比例控制	Dual proportional control of system pressure and flow	●	●	●	●	●	●	●	●	●	●
2	旁路精密滤油器	By-pass filter	○	○	○	○	○	○	○	○	○	○
3	液位显示	Display of oil level	●	●	●	●	●	●	●	●	●	●
4	液压油低位报警	Alarm of hydraulic oil at low level	○	○	○	○	○	○	○	○	○	○
5	油温报警	Alarm of hydraulic oil temperature	○	○	○	○	○	○	○	○	○	○
顶针和抽芯		Ejector and core puller										
1	双比例控制	Dual proportional control of ejector and core pull	●	●	●	●	●	●	●	●	●	●
2	顶针行程开关控制	Limit switch of stroke control	●	●	●	●	●	●	●	●	●	●
3	动模1组	1 set of core puller on moving platen	●	●	●	-	-	-	-	-	-	-
4	动模2组	2 sets of core puller on moving platen	○	○	○	●	●	●	●	●	●	●
5	定模1组	1 set of core puller on fixed platen	○	○	○	○	○	○	-	-	-	-
6	定模2组	2 sets of core puller on fixed platen	○	○	○	○	○	○	●	●	●	●
7	抽芯局部加压	Partial pressure building of core pulling	○	○	○	○	○	○	○	○	○	○
电气控制部分		Electric control part										
1	西门子PLC	Siemens PLC	●	●	●	●	●	●	●	●	●	●
2	7"高分辨率彩色屏	7" high resolution color screen	●	●	●	●	●	●	●	●	●	●
3	10.2"高分辨率彩色屏	10.2" high resolution color screen	○	○	○	○	○	○	○	○	○	○
4	模具存储30组	30 sets of mold parameters storage	●	●	●	●	●	●	●	●	●	●
5	扩展模具存储	Extendsion of mold parameters storage	○	○	○	○	○	○	○	○	○	○
6	伺服节能控制系统	Servo energy saving system	○	○	○	○	○	●	○	●	●	●
其它		Others										
1	锤头润滑装置	Plunger lubrication system	○	○	○	○	○	○	○	○	○	○

●为标准配置 standard ○为可选配置 optional

LS1000-LS5000配置表 STANDARD SERIES CONFIGURATION TABLE

配置项目		CONFIGURATION ITEMS	LS1000	LS1300	LS1650	LS2000	LS2500	LS3000	LS3500	LS4000	LS4500	LS5000
主体部分		Main parts										
1	联升标准机身颜色	Lanson standard machine color	●	●	●	●	●	●	●	●	●	●
2	操作侧电动落地安全门	Electric safety door on operation side	●	●	●	●	●	●	●	●	●	●
3	反操作侧电动落地安全门	Electric safety door on non-operation side	○	○	○	●	●	●	●	●	●	●
压射部分		Injection unit										
1	压射/增压电比例调节控制	Manual control of injection / intensification	●	●	●	●	●	●	●	●	●	●
2	非接触式位移传感器控制行程	Non-contact displacement sensor of stroke control	●	●	●	●	●	●	●	●	●	●
3	升降装置	lifting device	●	●	●	●	●	●	●	●	●	●
4	实时压射控制系统	Real time control system	○	○	○	○	○	○	○	○	○	○
合模部分		Clamping unit										
1	双比例控制开锁模	Dual proportional control of mold open and close	●	●	●	●	●	●	●	●	●	●
2	非接触式位移传感器控制行程	Non-contact displacement sensor of stroke control	●	●	●	●	●	●	●	●	●	●
3	特快锁模系统	Extremely fast mold closing system	●	●	●	●	●	●	●	●	●	●
4	机油+黄油双润滑系统	Oil and grease lubrication system	●	●	●	●	●	●	●	●	●	●
5	液压驱动半自动调模	Hydraulic semi-auto mold adjustment	●	●	●	●	●	●	●	●	●	●
6	自动调模	Automatic mold adjustment	○	○	○	○	○	○	○	○	○	○
7	操作侧上方液压抽出一根大杠	Hydraulic tie bar extraction (1pc) system on operation side	●	●	●	●	●	●	○	○	○	○
8	上方双液压抽杠装	Two top tie bar extraction device	○	○	○	○	○	○	●	●	●	●
9	指定托模架	Specified mold holding frame	○	○	○	○	○	○	○	○	○	○
10	快速换模系统	Fast mold changing system	○	○	○	○	○	○	○	○	○	○
11	锁模力显示	Clamping force display	○	○	○	○	○	○	○	○	○	○
12	模板加硬	Hardened mold platen	○	○	○	○	○	○	○	○	○	○
液压部分		Hydraulic part										
1	系统压力及流量双比例控制	Dual proportional control of system pressure and flow	●	●	●	●	●	●	●	●	●	●
2	液位显示	Display of oil level	●	●	●	●	●	●	●	●	●	●
3	液压油低位报警	Alarm of hydraulic oil at low level	●	●	●	●	●	●	●	●	●	●
4	液压油高位报警	Alarm of hydraulic oil at high level	○	○	○	○	○	○	○	○	○	○
5	旁路精密滤油器	By-pass filter	○	○	○	○	○	○	○	○	○	○
6	油温报警	Alarm of hydraulic oil temperature	●	●	●	●	●	●	●	●	●	●
7	油温加热	Hydraulic oil heating system	○	○	○	○	○	○	○	○	○	○
8	油泵出口高压过滤器	High pressure filter at oil outlet	○	○	○	○	○	○	○	○	○	○
顶针和抽芯		Ejector and core puller										
1	双比例控制	Dual proportional control of ejector and core pull	●	●	●	●	●	●	●	●	●	●
2	顶针行程开关控制	Limit switch of stroke control	●	●	●	●	●	●	●	●	●	●
3	顶针行程电子尺控制	Linear transducer control of ejector stroke	○	○	○	○	○	○	○	○	○	○
4	动模抽芯2组	2 sets of core puller on moving platen	●	●	●	●	●	○	○	○	○	○
5	动模抽芯4组	4 sets of core puller on moving platen	○	○	○	○	○	●	●	●	●	●
6	动模抽芯3组以上	More than 3 sets of core puller on moving platen	○	○	○	○	○	○	○	○	○	○
7	定模抽芯2组	2 sets of core puller on fixed platen	●	●	●	●	●	●	●	●	●	●
8	定模抽芯3组及以上	More than 3 sets of core puller on fixed platen	○	○	○	○	○	○	○	○	○	○
9	抽芯局部加压	Partial pressure building of core pulling	○	○	○	○	○	○	○	○	○	○
10	抽芯储能装置	Energy accumulating device of core puller	○	○	○	○	○	○	○	○	○	○
11	抽芯快换接头	Fast changing connector of core puller	○	○	○	○	○	○	○	○	○	○
电气控制部分		Electric control part										
1	西门子PLC	Siemens PLC	●	●	●	●	●	●	●	●	●	●
2	12"高分辨率彩色屏	12" high resolution color screen	●	●	●	●	●	●	●	●	●	●
3	模具存储200组以上	More than 200 sets of mold parameters storage	●	●	●	●	●	●	●	●	●	●
4	电箱空调	Air conditioner of electrial cabinet	●	●	●	●	●	●	●	●	●	●
5	伺服节能控制系统	Servo energy saving system	●	●	●	●	●	●	●	●	●	●
6	曲线显示功能	Function of curve display	○	○	○	○	○	○	○	○	○	○

●为标准配置 standard ○为可选配置 optional

LS180-LS500模板图 TEMPLATE SIZE CHART

LS180

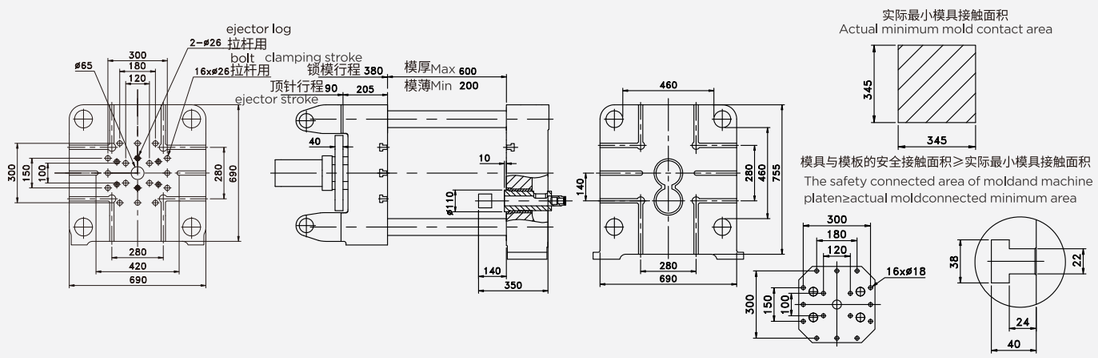

LS220

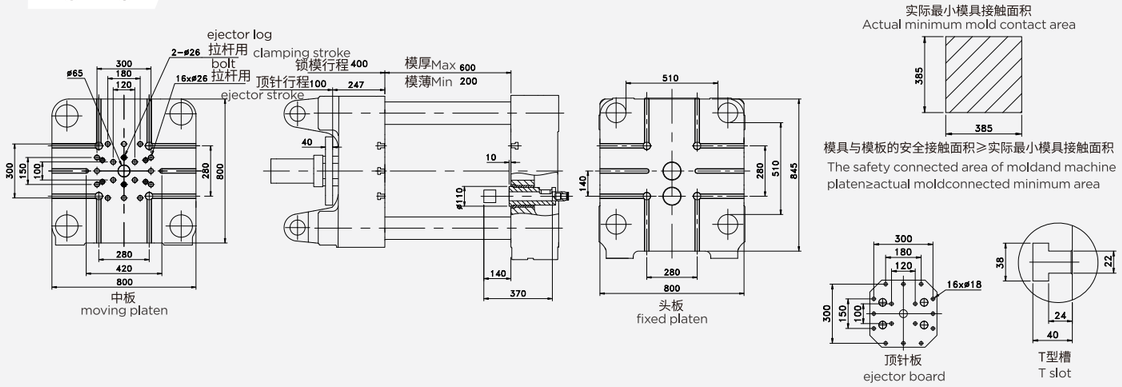

LS300

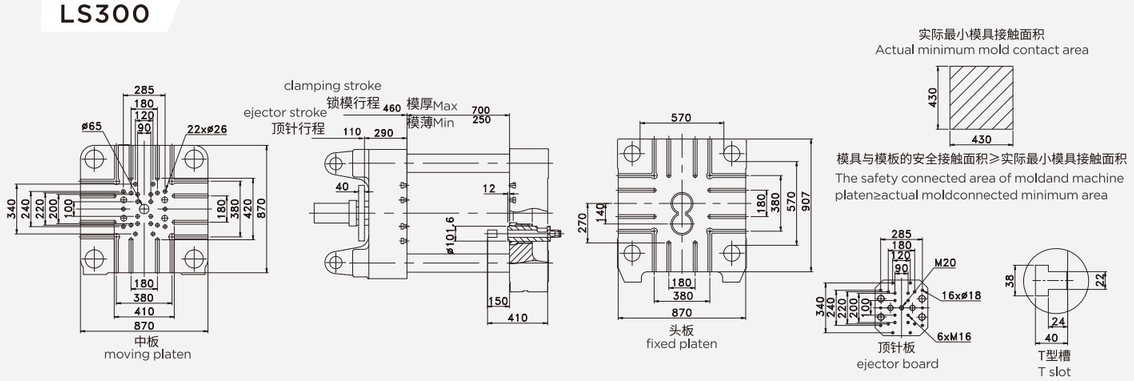

LS350

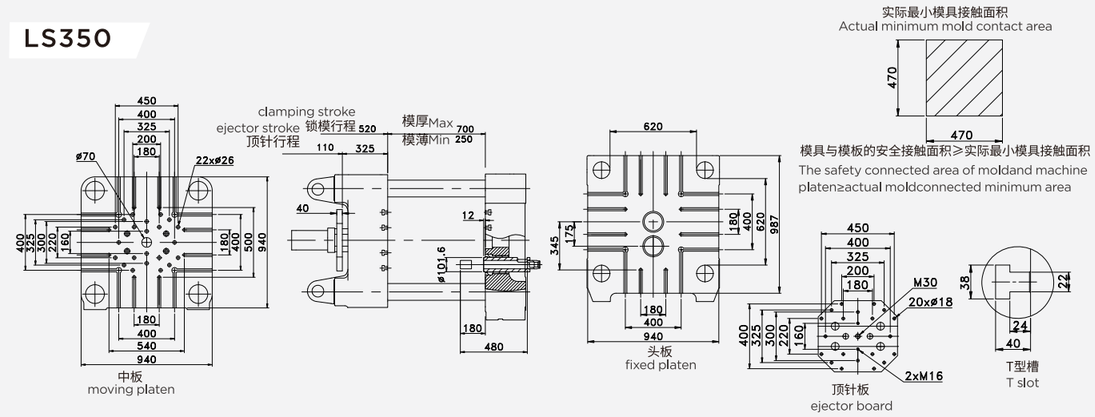

LS400/400P

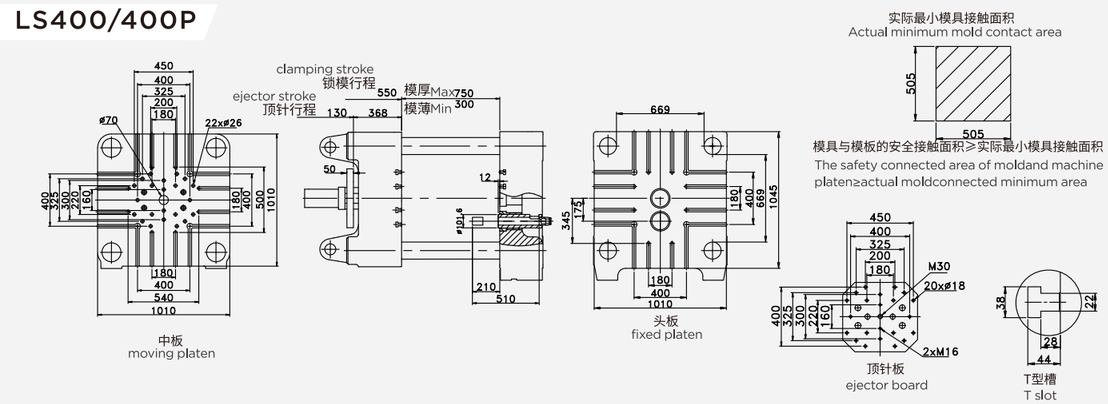

LS500

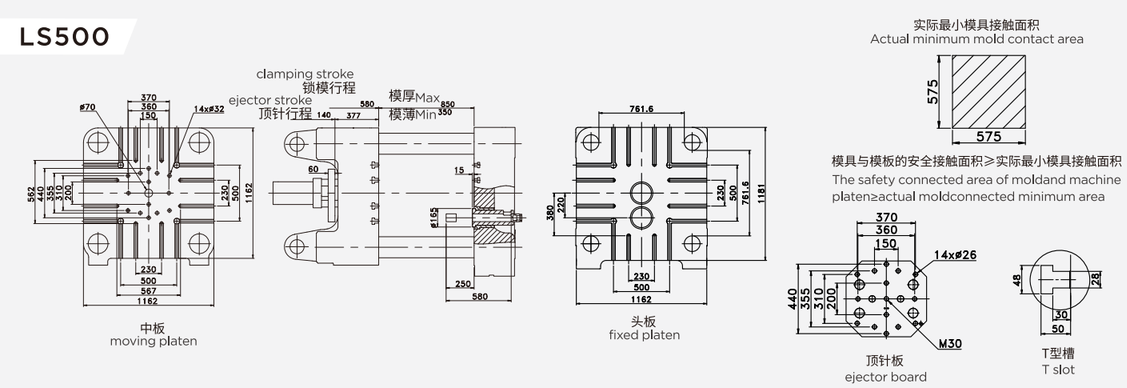

LS650-LS1000模板图 TEMPLATE SIZE CHART

LS650

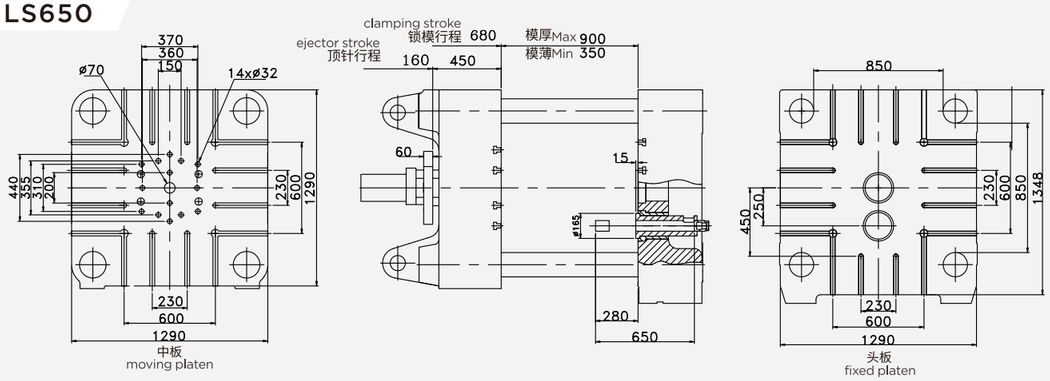

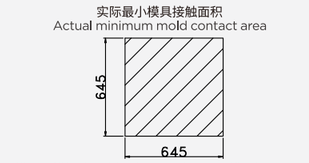

模具与模板的安全接触面积≥实际最小模具接触面积
The safety connected area of moldand machine platen≥actual moldconnected minimum area

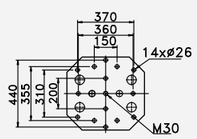

顶针板
ejector board

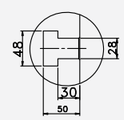

T型槽
T slot

LS800

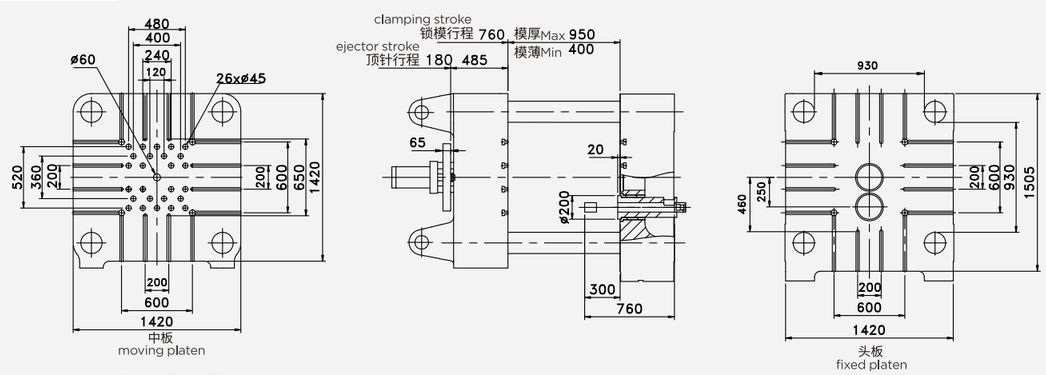

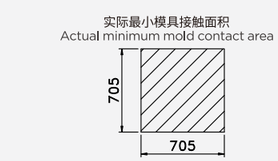

模具与模板的安全接触面积≥实际最小模具接触面积
The safety connected area of moldand machine platen≥actual moldconnected minimum area

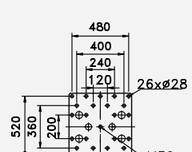

顶针板
ejector board

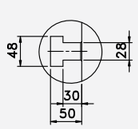

T型槽
T slot

LS900

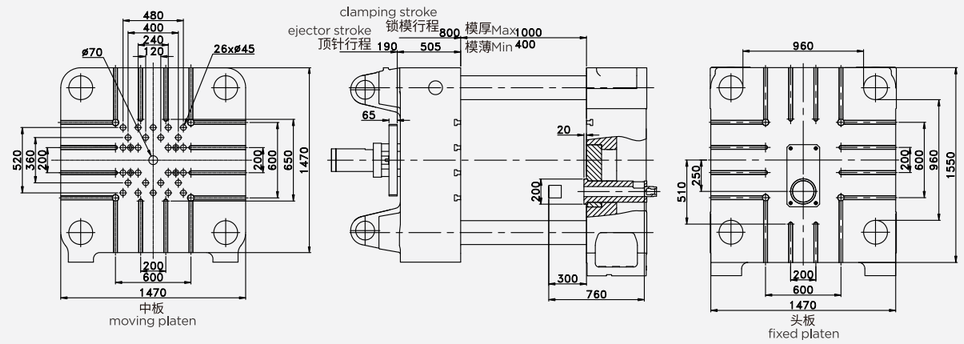

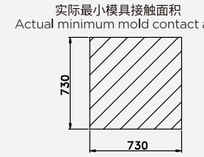

模具与模板的安全接触面积≥实际最小模具接触面积
The safety connected area of moldand machine platen≥actual moldconnected minimum area

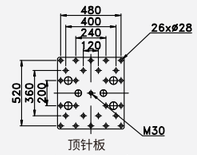

顶针板
ejector board

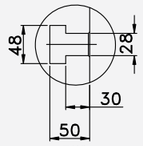

T型槽
T slot

LS1000

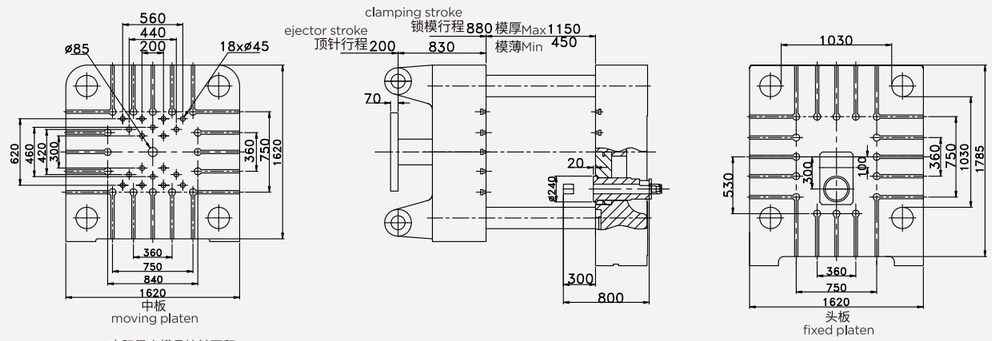

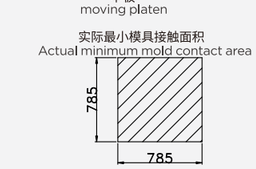

模具与模板的安全接触面积≥实际最小模具接触面积
The safety connected area of moldand machine platen≥actual moldconnected minimum area

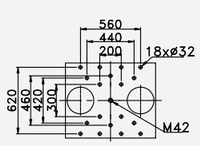

顶针板
ejector board

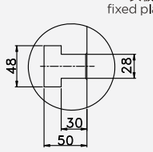

T型槽
T slot

LS1300-LS2500模板图 TEMPLATE SIZE CHART

LS1300

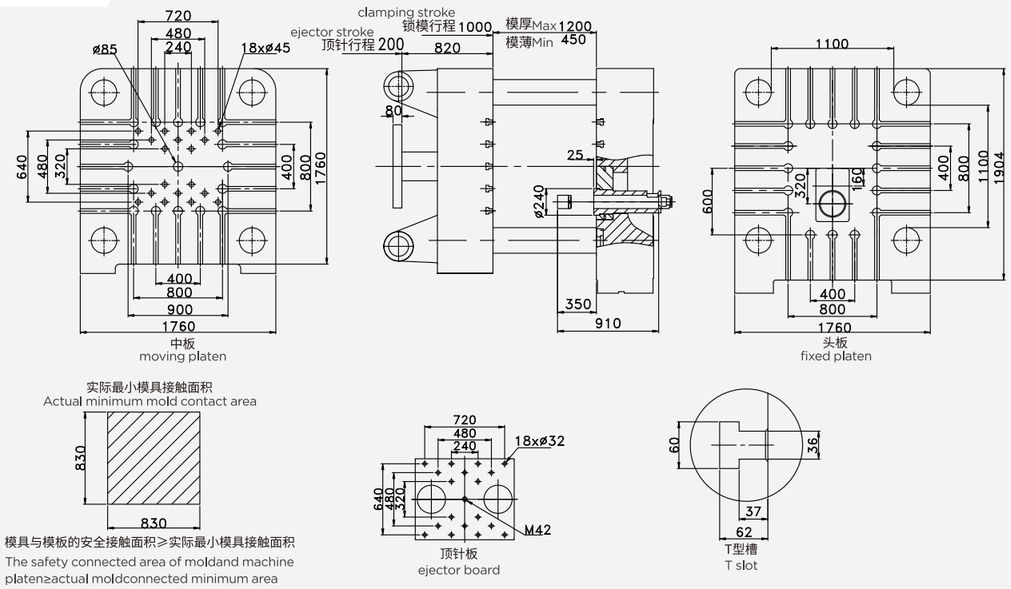

LS1650

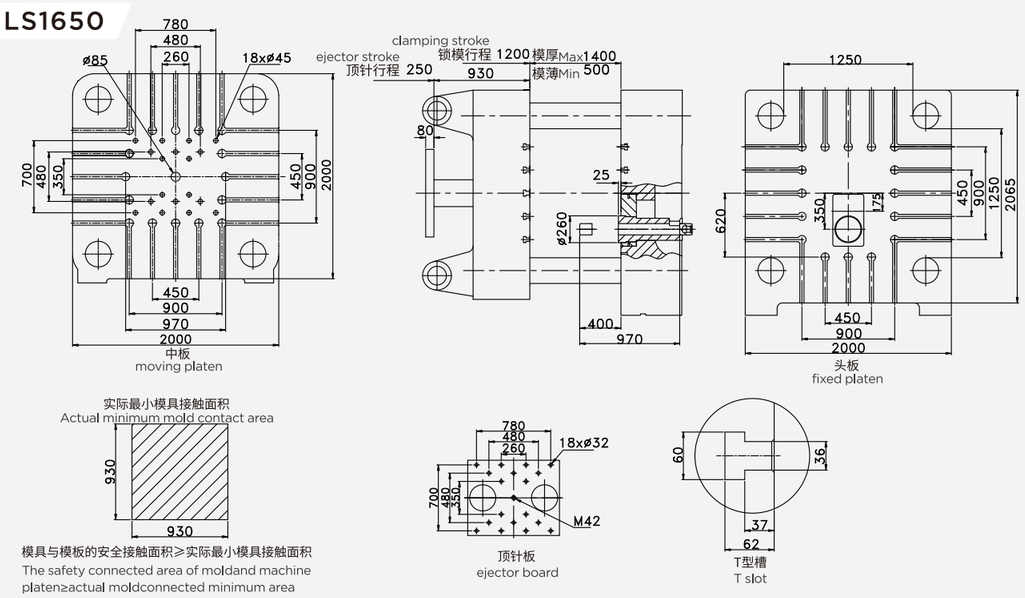

LS2000

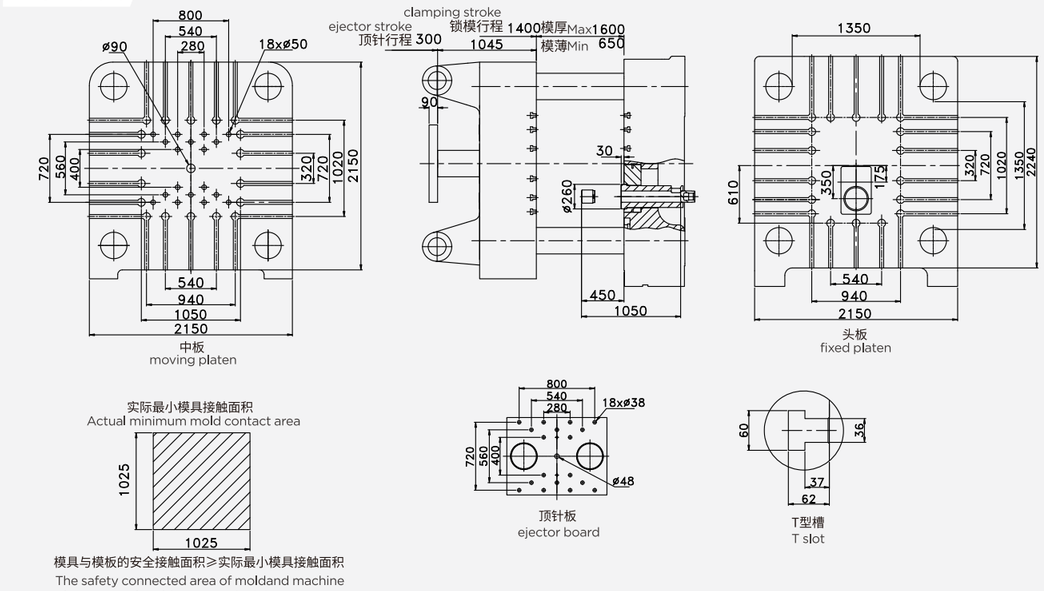

LS2500

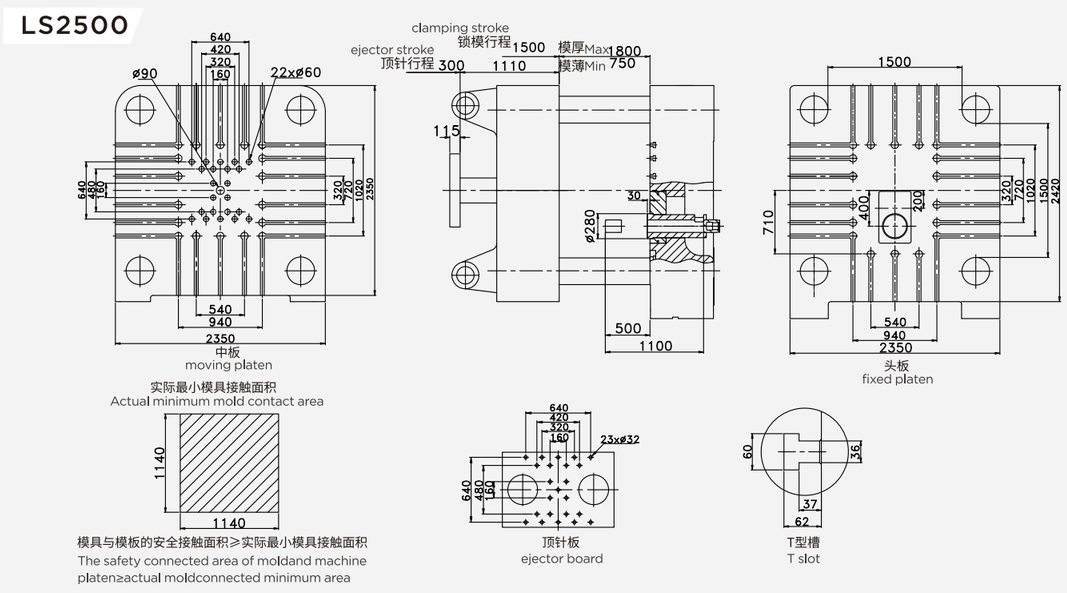

LS3000-LS4500模板图 TEMPLATE SIZE CHART

LS3000

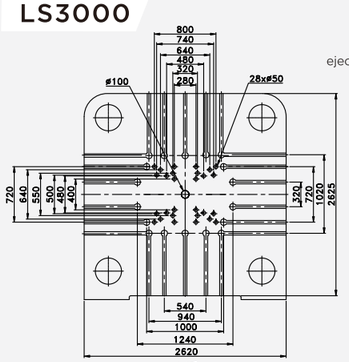

中板
moving platen

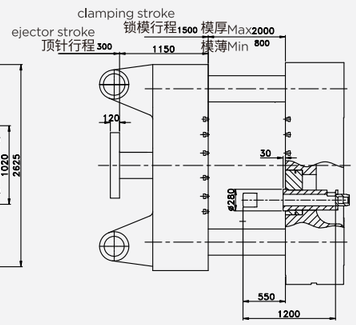

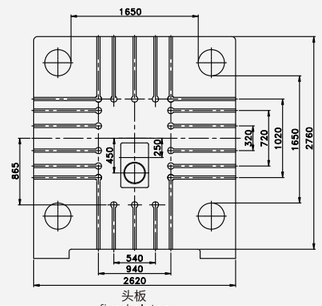

头板
fixed platen

实际最小模具接触面积
Actual minimum mold contact area

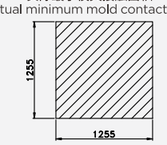

模具与模板的安全接触面积≥实际最小模具接触面积
The safety connected area of moldand machine platen≥actual moldconnected minimum area

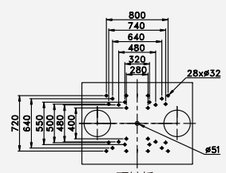

顶针板
ejector board

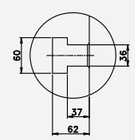

T型槽
T slot

LS3500

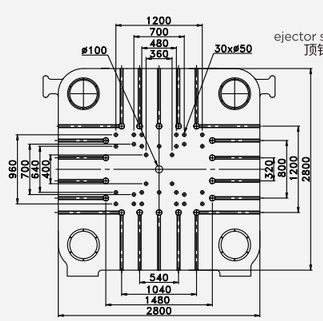

中板
moving platen

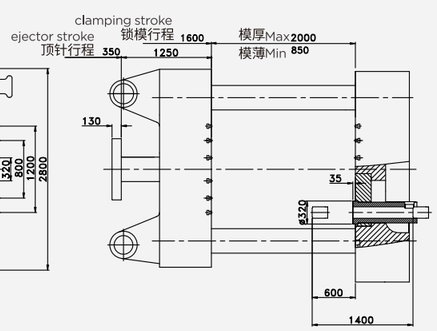

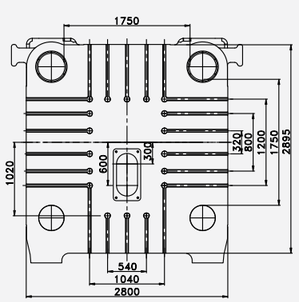

头板
fixed platen

实际最小模具接触面积
Actual minimum mold contact area

模具与模板的安全接触面积≥实际最小模具接触面积
The safety connected area of moldand machine platen≥actual moldconnected minimum area

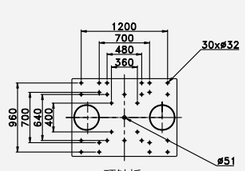

顶针板
ejector board

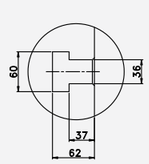

T型槽
T slot

LS4000

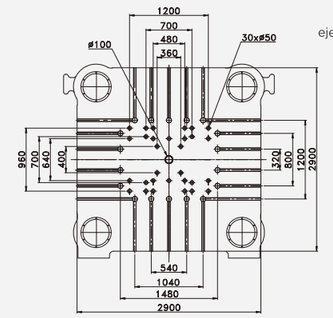

中板
moving platen

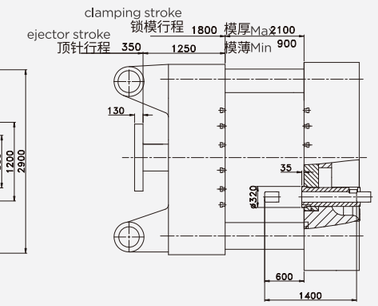

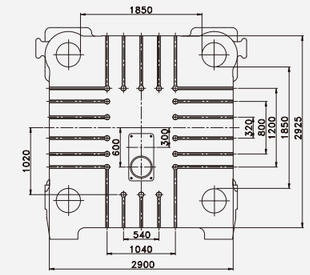

头板
fixed platen

实际最小模具接触面积
Actual minimum mold contact area

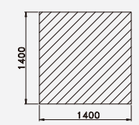

模具与模板的安全接触面积≥实际最小模具接触面积
The safety connected area of moldand machine platen≥actual moldconnected minimum area

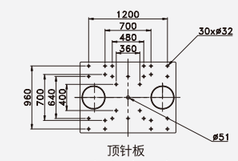

顶针板
ejector board

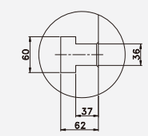

T型槽
T slot

LS4500

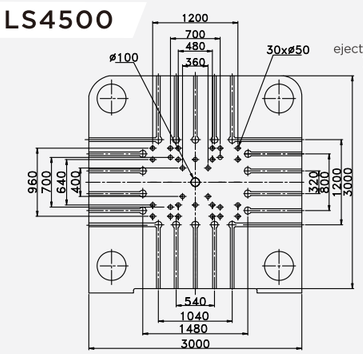

中板
moving platen

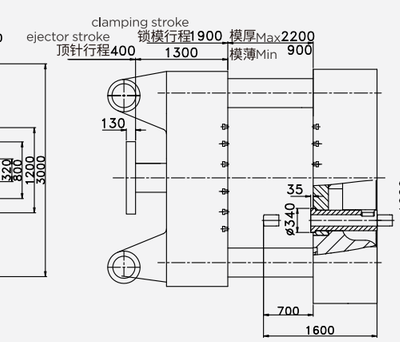

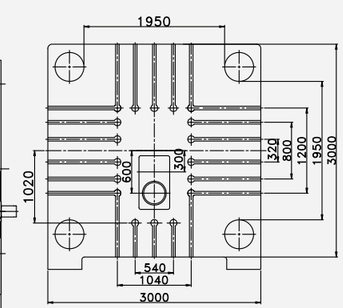

头板
fixed platen

实际最小模具接触面积
Actual minimum mold contact area

模具与模板的安全接触面积≥实际最小模具接触面积
The safety connected area of moldand machine platen≥actual moldconnected minimum area

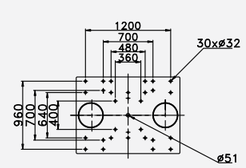

顶针板
ejector board

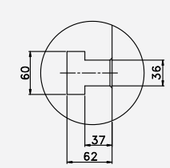

T型槽
T slot

我司保留权利作出任何技术数据修改，恕不另行通知，敬请谅解。
Our company reserves the right to make any technical data modifications without prior notice. We apologize for any inconvenience caused.